RoHS	This products can apply to the SWB Doc .NO. QA-3-04-005 of Environmental&Material Management Rules

RD-1

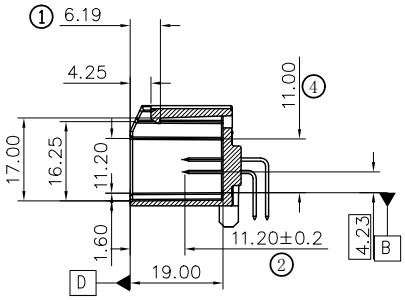

SECTION A-A
SCALE 1:1

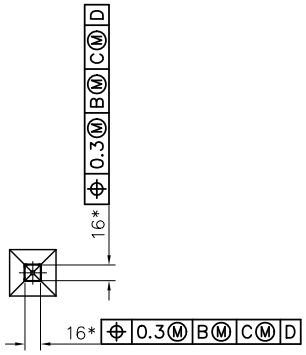

DETAIL A
SCALE 5:1

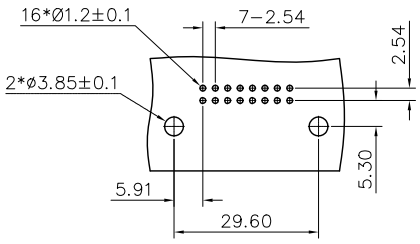

Recommended P.C.B Layout(T=1.59mm)
General Tolerance±0.05

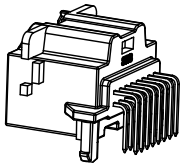

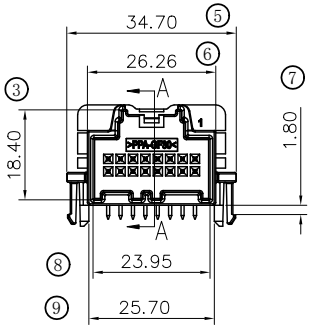

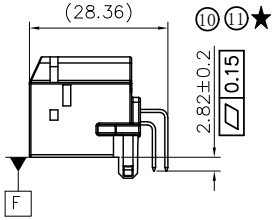

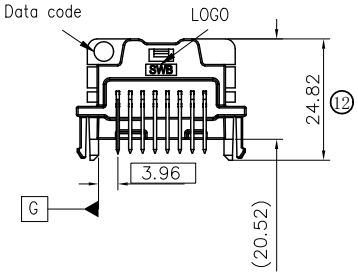

■Specifications :

- Voltage rating: 18V . AC / DC
- Current rating: 5A .AC / DC
- Withstanding voltage: 1000V AC/minute
- Temperature range: -40°C~+125°C
- Insulation resistance: ≥100MΩ
- Material(Pin): PIN-Brass Housing-PPA GF30
- Product Specification: PS-2552-1
- Packaging Drawing: PK-2552WR-2x08P-PASN3ZT
- Symboms for SPC dimensions: "★"

2552 W R - 2*08 P - PA SN3 Z T
① ② ③ ④ ⑤ ⑥ ⑦ ⑧ ⑨

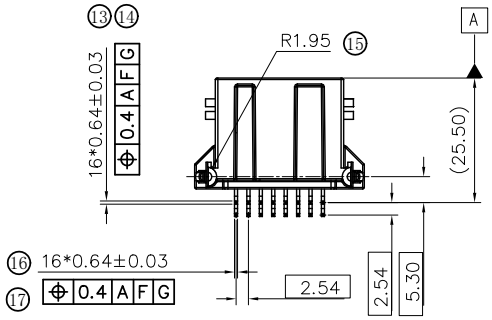

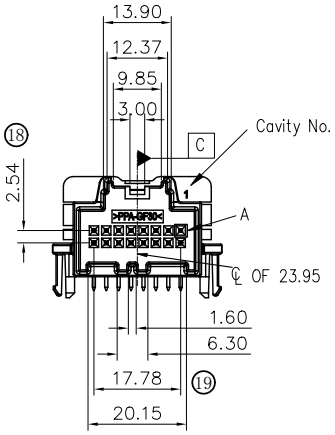

① Series No.
② Category: W-wafer
③ Connector Type: R-Right Angle 90°
④ Row No.-Pin No: 2*08-2x08Pin
⑤ Special encoding: P-Positioning Column
⑥ Plastic material: PA- PPA
⑦ Plating Code: SN3- Ni 40~120u"(1~3um)overall
Top plating: Sn 80~200u"(2~5um)overall
⑧ Color: Z-brown
⑨ Manner of packing: T-Blister tray

DATE	REV	ECN NO.	DESCRIPTION	MODIFY	APPROVAL

GENERAL TOLERANCE
.X ±0.35
.XX ±0.25
.XXX ±0.15
X.° ±2°
PROJECT

东莞市思索连接器有限公司
SWB CONNECTORS CO.,LTD

APPROVAL	CHECK	DRAWN	DATE
Jason Huang	Jinjiang yang	Xiaohu Jiang	2020/12/08

PART NO.
2552WR-2*08P-PASN3ZT

TITLE
2.54mm Pitch connector Wafer

UNIT	SCALE	SHEET	REV	NUMBER
mm	1:1.5	1/1	A0	A-000